basic education

Department:
Basic Education
REPUBLIC OF SOUTH AFRICA

NATIONAL ASSESSMENT EXEMPLAR

2023

GRADE 9

Subject: Technology

Marks: 80

Duration: 120 Minutes
excluding 15 minutes reading time

EXEMPLAR

The test consists of 24 pages excluding the cover page.

Instructions to the learner

1. You will receive 15 minutes reading time before you begin answering this test.
2. Read all the instructions and questions carefully.
3. Answer all the questions.
4. Drawings must be clear, neat and done in pencil.
5. Use the answer sheet to write all your answers.

The test starts on the next page.

Do not turn the page until you are told to do so.

EXEMPLAR

SECTION A

Question 1

Choose the correct option from the responses provided. Write down only the letter of the correct answer.

1.1 Learners are asked to build an electrical toy car within two days.

What do we call the allocated time?

A constraint

B budget

C requirement

D problem statement (1)

1.2 After the investigation, designing, making and evaluation of the model of the circuit, what will the next step be?

A test the model

B draw the model

C communicate the model

D make the model (1)

1.3 Name the stage when one works safely, measuring, marking out, cutting and bending materials to solve an identified problem.

A evaluate

B make

C design

D communicate (1)

EXEMPLAR

1.4 What are the calculations for the cost of labour, material and transport called?

A plans
B designs
C budget
D flow chart (1)

1.5

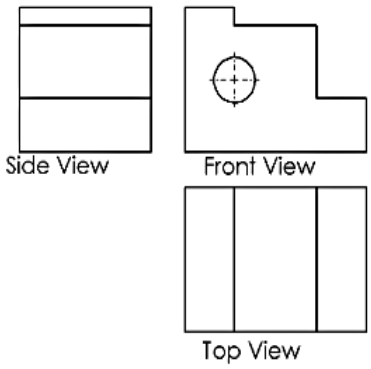

[Source:htttps://media.rmit.edu.au/disweb/toolbox/electrotech]

What type of drawing is shown above?

A oblique
B isometric
C perspective
D orthographic (1)

1.6 Luzuko was given the sizes and the materials to build his toy box.
What do we call these requirements?

A specifications
B scenario
C constraints
D tools (1)

EXEMPLAR

1.7 What do we call a 3-D drawing where the side lines emerge at 30 degrees?

A oblique
B isometric
C perspective
D orthographic (1)

1.8 What is the main purpose of using dimensions in graphic communication?
It is to make sure that it provides …

A neatness.
B accuracy.
C size.
D completion. (1)

1.9

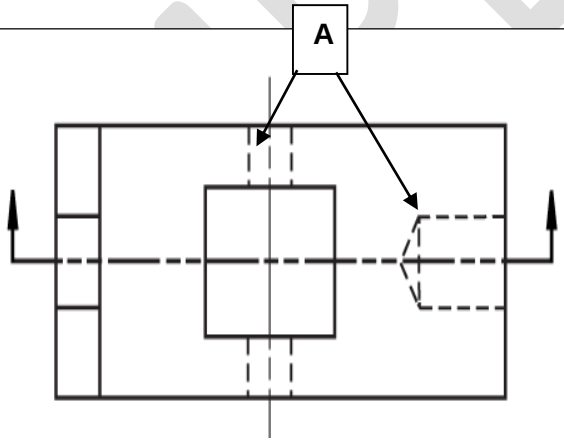

[Adapted from: https://www.npsk12.com/cte]

Identify the type of lines marked A.

A dimension line
B hidden detail line
C centre line
D outline (1)

EXEMPLAR

1.10 Name the stage, when teams meet to test the final product and decide whether it meets the required specifications.

A investigation
B design
C communication
D evaluation (1)

1.11 How are dimensions presented on drawings?

A centimetres
B kilometres
C millimetres
D metres (1)

1.12 What can you use to accurately draw large objects onto a paper?

A numbering
B line type
C scale
D extension lines (1)

1.13

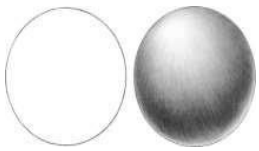

[Source:reilly.co.//library/view/diagram.faces]

What is the drawing technique presented above called?

A shading
B texturing
C colouring
D shadowing (1)

EXEMPLAR

1.14 When making a product, the steps are arranged in a specific order.
What is this arrangement of the steps called?

A product
B flow diagram
C specifications
D project portfolio (1)

1.15 Design and make a container using recyclable plastic to safely store and carry your school stationery.
What does this statement refer to?

A constraint
B design brief
C research
D specification (1)

1.16 What are the sketches drawn before a final design called?

A working drawings
B orthographic drawings
C initial drawings
D exploded drawings (1)

1.17 Which are the four features used to make a 3-D object look realistic?

A texture, colour, shadow and shading
B texture, lines, shading and colour
C texture, dimensions, colour and shadow
D texture, colour, lines and dots (1)

EXEMPLAR

1.18 What are the features of a product or system that make it user-friendly?

A aesthetics
B artistic
C ergonomics
D specifications (1)

1.19 When you draw initial ideas of a model using a pencil and paper only, what type of drawings will they be?

A technical drawing
B working drawing
C final drawing
D free-hand drawing (1)

1.20 What is the sequence that one will follow when making a box to house an electrical circuit in an alarm system?

A Identifying material — collecting material — measuring material — cutting — assembling — testing
B Identifying material — measuring material — collecting material — cutting — assembling — testing
C Identifying material — measuring material — assembling — collecting material — cutting — testing
D Identifying material — assembling — measuring material — cutting — collecting material — testing (1)

EXEMPLAR

1.21 Why is working resourcefully with materials important?
It permits one to …

A use any available materials.
B work accurately.
C use materials economically.
D work neatly. (1)

1.22 What does the scale 1:3 mean?

A The drawing is three times bigger than the object.
B The object is three times bigger than the drawing.
C The drawing and the object are the same size.
D Three drawings are needed for one object. (1)

1.23

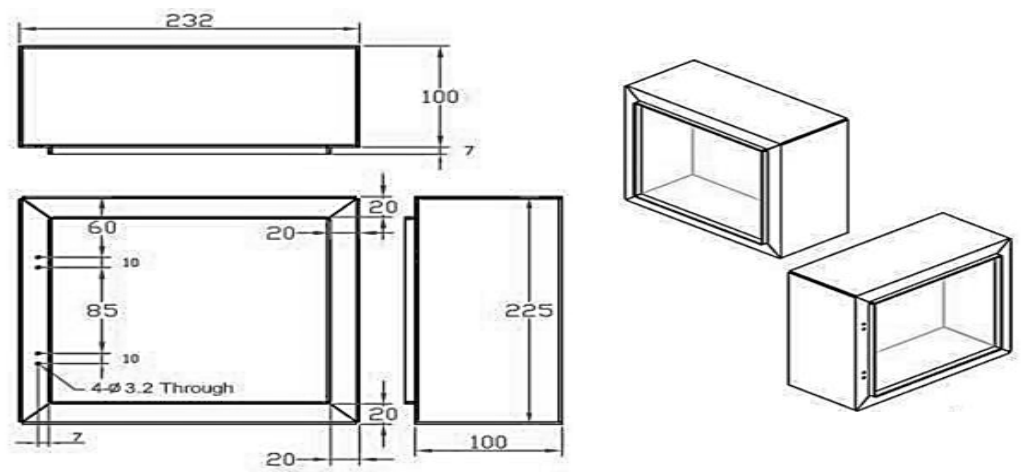

[Adapted from: http:www.researchgate.net/figure/Design-change-drawings-for-simple-electrical-box]

What does the above diagram illustrate?

A the working drawings of selected idea
B different workable solutions
C the development of a selected idea
D the final design with notes (1)

1.24

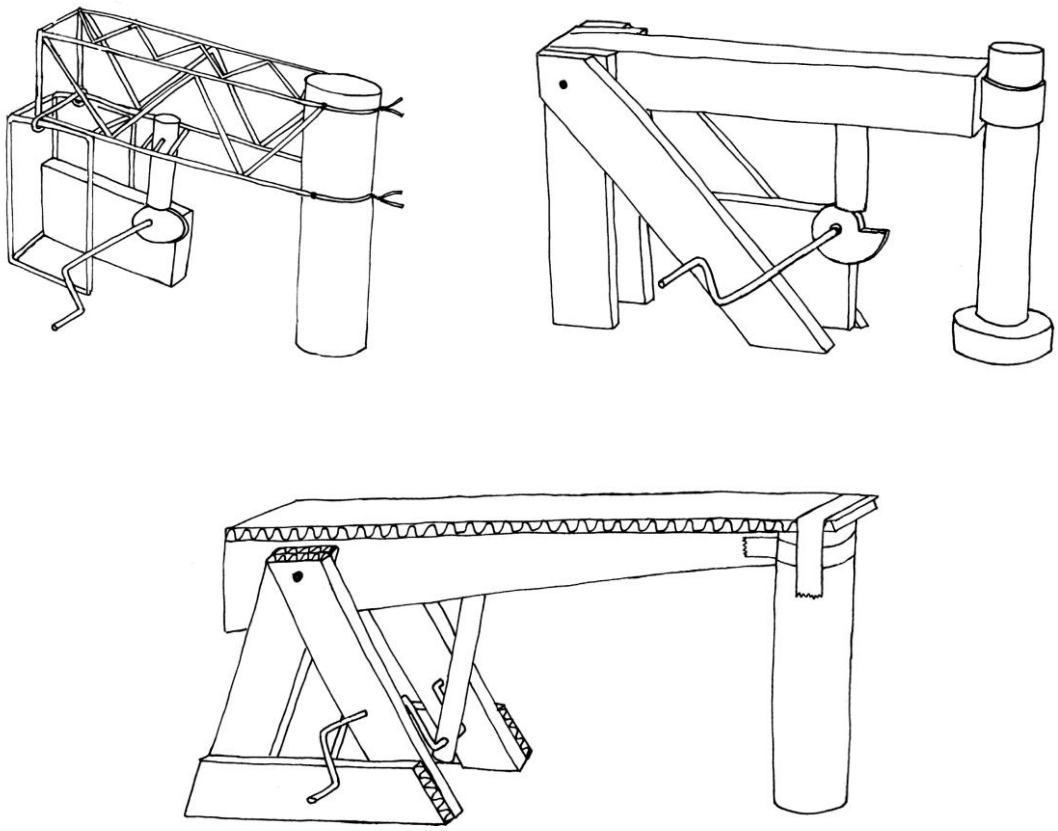

[Adapted from: http://www.mstworkbooks.co.za/downloads/Tech1_Gr8_LB.pdf]

Buhle has presented three possible ideas for a can crusher.

What must she do next?

A design the model that she likes the most

B write the specifications

C write the design brief

D evaluate and select the best idea (1)

[24]

Question 2: Scenario

Read the text and answer questions that follow.

Mercy works from 08:00 – 20:00. When she gets home it is already dark. Her biggest fear is to enter her home in the dark. She needs some type of device for her outside light that will detect a change in light intensity and will automatically switch on. The light will be on when she arrives home. The device needs to be installed within 2 days and should allow the LDR to detect the changes in light intensity. *[Created for DBE, 2023]*

2.1 Identify the problem that is faced by Mercy. (1)

2.2 Write the design brief to solve Mercy's problem. (3)

2.3 Identify **ONE** specification of the required electronic circuit device. (1)

2.4 What constraint should be considered when designing the device? (1)

2.5 Design a circuit diagram to solve the identified problem using the following components: (10)

- Light Dependent Resistor (LDR)
- Light Emitting Diode (LED)
- 9 V battery
- Resistor of 470 Ω
- Resistor of 1 kΩ
- NPN Transistor

[16]

TOTAL FOR SECTION A: 40

EXEMPLAR

SECTION B

Question 3

Choose the correct option from the responses provided. Write down only the letter of the correct answer.

3.1 What is the electrical component that controls the flow of current?

A BUZZER
B SWITCH
C LED
D LDR (1)

3.2 Identify the function of a transistor.

A It gives off light and sound when current passes through it.
B It stores and releases electrical energy.
C It acts as a switch and amplifies current.
D It regulates the flow of the current. (1)

3.3

[Source:mstworkbook.co.za/technology/.gr9]

What is the function of this component?

A stores and releases electrical energy
B detects lights, resistance decreases in bright light
C converts electrical energy to kinetic energy
D detects heat (1)

EXEMPLAR

3.4 If the resistance is 2 Ω and the voltage supplied is 8 V, calculate the value of the current.

A 16 A
B 4 A
C 10 A
D 0.25 A (1)

3.5 Calculate the value of the resistance in a lamp with a current of 0.5 A when it is connected to a power supply of 220 V.

A 0.002 Ω
B 110 Ω
C 220.5 Ω
D 440 Ω (1)

3.6

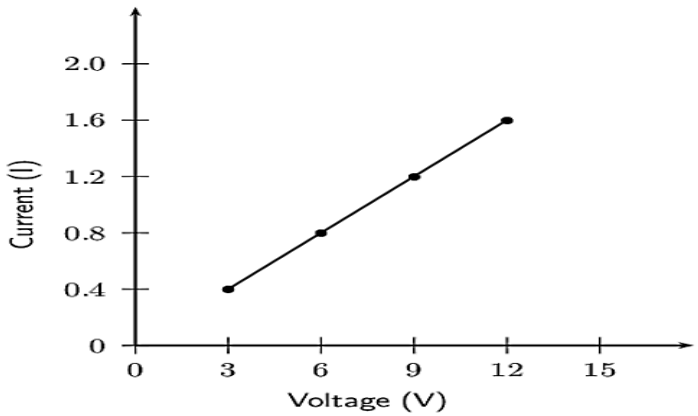

[Source:Ohms Laws/electrical circuit/siyavula]

Formulate a conclusion from the graph.

A When the current increases, the voltage decreases.
B When the voltage increases, the current increases.
C When the voltage increases, the current decreases.
D When the voltage decreases, the current stays the same. (1)

3.7

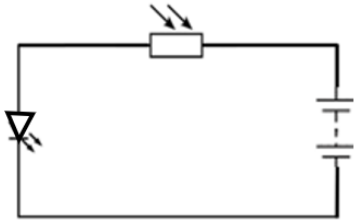

[Adapted from: https://circuitcloud.in/building-first-project-ldr-circuit]

What is the effect of the LDR in the circuit?

A When the LDR is exposed to a high light intensity, the resistance value decreases.

B When the LDR is exposed to a high light intensity, the resistance value increases.

C When the LDR is exposed to a low light intensity, the resistance value will be low.

D When the LDR is exposed to a low light intensity, the resistance value will be constant. (1)

EXEMPLAR

3.8

TABLE 1

Colours	1st Band	2nd Band	3rd Band	4th Band
black	0	0		
brown	1	1	0	
red	2	2	00	
orange	3	3	000	
yellow	4	4	0000	
green	5	5	00000	
blue	6	6	000000	
violet	7	7	0000000	
grey	8	8	00000000	
white	9	9	000000000	
gold				± 5 %
silver				± 10 %

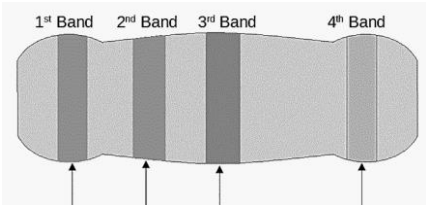

Orange Orange Brown Gold

[Source:Electronicreference.com]

Determine the resistance value of the resistor above, using the provided colour code table.

A 30 000 Ω ± 5 %

B 33 000 Ω ± 5 %

C 330 Ω ± 5 %

D 331 Ω ± 5 % (1)

EXEMPLAR

3.9

7 500 Ω ±10 %

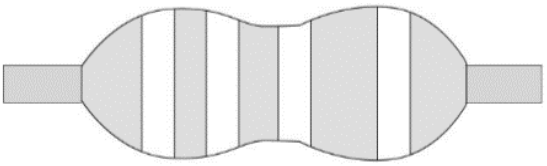

[Source:mstworkbook.co.za/technology/.gr9]

Determine the colour bands of the resistor.

A green, violet, red, silver

B red, green, violet, silver

C violet, red, green, silver

D violet, green, red, silver (1)

3.10

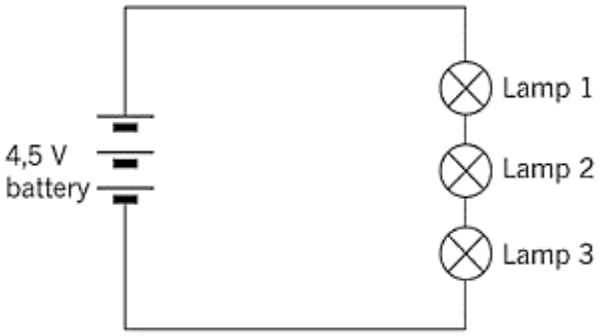

[Source:mstworkbook.co.za/technology/.gr9]

Analyse the circuit diagram.

What will happen if Lamp 1 stops working?

A Lamp 2 will continue to work.

B Lamp 3 will continue to work.

C Lamp 2 and Lamp 3 will stop working.

D Lamp 2 will continue to work and Lamp 3 will stop working. (1)

EXEMPLAR

3.11

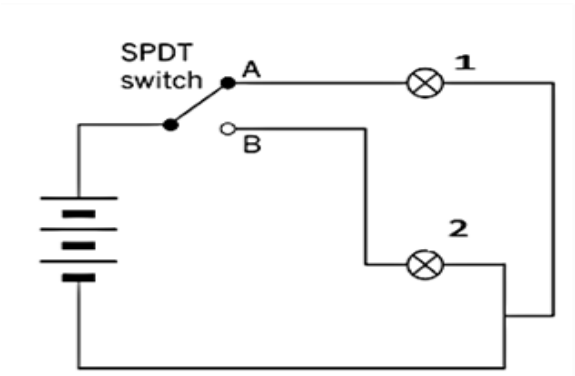

[Source:mstworkbook.co.za/technology/.gr9]

Analyse the use of the Single Pole Double Throw (SPDT) switch in the given electric circuit.

Select the correct option.

A When the switch is thrown at A, light bulb 1 and light bulb 2 will glow.

B When the switch is thrown at A, light bulb 1 will glow.

C When the switch is thrown at A, light bulb 1 and light bulb 2 will not glow.

D When the switch is thrown at B, light bulb 1 and light bulb 2 will glow. (1)

3.12

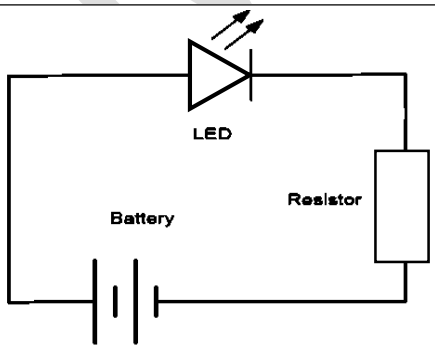

[Adapted from: https://www.makerspaces.com/basic-electronics]

What is the effect of the Light Emitting Diode (LED) as a component in the circuit?

A It emits light when current passes through it.

B It emits sound when current passes through it.

C It converts electrical energy into kinetic energy.

D It converts kinetic energy into electrical energy. (1)

3.13

[Source:https://dolphy.in/shop/1800w-white-hand-dryer-high-grade-abs]

Analyse how the warm hand dryer device works.
What will happen when people place their hands under the hand dryer?

A The hand movement is detected by the sensor and opens the circuit allowing warm air to blow on the hands, drying them.

B The hand movement is detected by the sensor and closes the circuit allowing the cold air to blow on the hands, drying them.

C The hand movement is detected by the sensor and closes the circuit allowing warm air to blow on the hands, drying them.

D The hand movement is detected by the sensor and opens the circuit allowing cold air to blow on the hands, drying them. (1)

EXEMPLAR

3.14

[Adapted from: mstworkbook.co.za/technology/.gr9]

Which method is being demonstrated above to preserve a metal?

A the use of electricity to coat metal with another metal
B the use of oil to coat a metal
C the use of varnish to coat a metal
D the use of paint to coat a metal (1)

3.15 What metal is used when galvanising steel or iron to protect it from corrosion?

A Gold
B Mercury
C Platinum
D Zinc (1)

3.16 What is the correct method used to preserve metal using the undercoat, basecoat and topcoat?

A galvanising
B painting
C electroplating
D varnishing (1)

EXEMPLAR

3.17 Which statement is the correct description of corrosion?

A Corrosion is the deterioration of metal after it is exposed to carbon dioxide and water.

B Corrosion is the deterioration of metal after it is exposed to oxygen and water.

C Corrosion is the deterioration of metal after it is exposed to nitrogen and water.

D Corrosion is the deterioration of metal after it is exposed to hydrogen and water. (1)

3.18

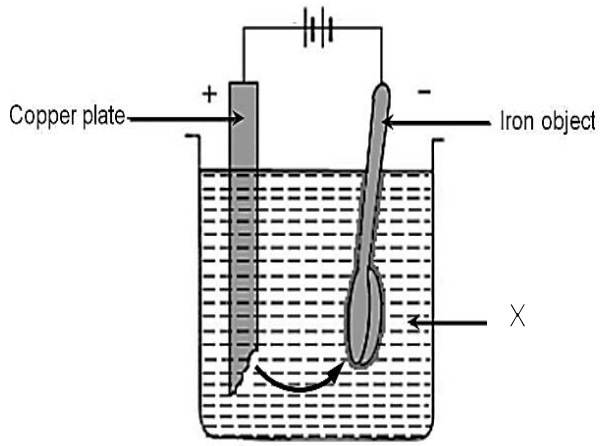

[Source:http://byjus.com/question-answer/explain-process-of-electroplating-copper-ions]

Which electrolyte labelled X can be used to preserve the iron object?

A Iron sulphate

B Magnesium sulphate

C Potassium sulphate

D Copper sulphate (1)

3.19

[Source:mstworkbook.co.za/technology/.gr9]

Predict the suitable method of preserving the product as illustrated.

A drying

B salting

C storing grain

D pickling (1)

3.20

Water bottles

[Source:https://www.factsaboutbpa.org/blog/three-reasons-safely-drink-out-plastic-water-bottles]

Which type of plastic is used to manufacture water bottles?

A Polyethylene Terephthalate

B High-Density Polyethylene

C Polypropylene

D Polystyrene (1)

EXEMPLAR

3.21 Which plastic identification code classifies a polyvinyl chloride?

A

B

C

D

(1)

3.22 Classify the type of plastic, polypropylene (PP) according to its description.

A It is clear, tough, good barrier for liquids and gases, heat resistant.

B It can be rigid or foamed, has low melting point; in foamed form it is an excellent heat insulator.

C It is resistant to chemicals, tough, heat-resistant and a barrier to moisture.

D It is resistant to chemicals, electrically insulating, tough and can be rigid or flexible. (1)

3.23 Which is the correct description of recycling?

A It is a process of making something smaller or to use less of the product.

B It is a process of making new products from old materials.

C It is a process of using something again and again.

D It is a process of taking something to a dumpsite. (1)

EXEMPLAR

3.24 Which of the steps of re-manufacturing waste plastic into pellets for re-use has been arranged correctly?

A Collection—shredding—sorting—cleaning—melting—making of pellets

B Collection—cleaning—sorting—melting—shredding—making of pellets

C Collection—melting—sorting—shredding—cleaning—making of pellets

D Collection—sorting—shredding—cleaning—melting—making of pellets (1)

[24]

EXEMPLAR

SECTION C

Question 4: Case Study

Read the text and answer questions that follow.

Food preservation is one of the oldest technologies. People ate what they grew on the land and what they hunted. They had to take good care of their food to prevent it from going off and making them ill. Food preservation is about the treatment, handling and storage of food to ensure that the shelf life of food is extended. An important part of food preservation is to create conditions that prevent dangerous bacteria from growing.

Food may be preserved by using the following methods:

Drying: it is an ancient method used for food preservation. In this method, food items are dried or dehydrated to ensure that the percentage of water decreases and as a result, it stops bacterial growth. The drying process can be done by bed dryers, shelf dryers, household ovens and exposure to the sun. Examples of dried food are peaches, spinach, meat, etc.

Salting: in this method, salt removes the moisture from food and makes an unfavourable environment for micro-organisms to grow. There are very few bacteria that survive this excessively high salt condition. This method can be used with other methods (dehydration, acidic solution) too. Food items such as potatoes (chips), fish, meat and many more are preserved by this method. However, using too much salt is not good for our health. Another negative impact of salt preservation is that food may lose its nutritional value or quality.

Pickling: preserves food using liquids such as vinegar and brine (salt water) to prevent growth of micro-organisms causing food spoilage. Foods suitable for pickling are cucumbers, peppers, onions, gherkins, etc.

[Created for DBE,2023]

4.1 Identify the **THREE** methods of preserving food from the case study. (3)

4.2 Referring to the case study, match the preservation method in Column A with the correct food items in Column B. Write the letter of the correct answer on the provided answer sheet. (3)

Column A	Column B
4.2.1 Pickling	A. Peaches and spinach
4.2.2 Drying	B. Potatoes, fish and meat
4.2.3 Salting	C. Cucumbers, peppers, onions, and gherkins

4.3 a. List **TWO** advantages of preserving food by salting. (2)

b. List **TWO** disadvantages of preserving food by salting. (2)

4.4 State **TWO** negative impacts if food is **not** preserved. (2)

4.5 What is the importance of preserving food to:

a. the economy (1)

b. society? (1)

4.6 Explain the importance of salt when drying food. (1)

4.7 In your opinion, why is good hygiene important when food is being preserved? (1)

[16]

[80]

End of test

EXEMPLAR

EXEMPLAR